TYPE 17HD

2-way check valve

Cartridge design optional

- **Check valve for high pressure applications**

TECHNICAL SPECIFICATION

Type of control:	-
Design:	-
Connection:	Threaded 19/16-18 UNF *Other connection like Cartridge on request*
Installation:	Preferable upright
Pressure range:	0.5 - 1000 bar
Medium:	Clean, neutral, liquid or gaseous
Viscosity:	50 mm²/s
Temperature range:	Medium -40 °C bis +80 °C Ambient -20 °C bis +80 °C
Body material:	Stainless steel 1.4462
Metallic inner parts:	Stainless steel 1.4301, 1.4571
Sealing:	FKM, POM

VALVE FEATURES

- For high pressure applications 1000 bar
- High life time
- Simple and compact design
- High-quality materials
- Reliable and sturdy sealing elements
- Cartridge design optional

ARTICLE NUMBERS

017.000131	Check valve 1000 bar fitting UNF
017.000132	Check valve 1000 bar cartridge DN8

DIMENSIONS

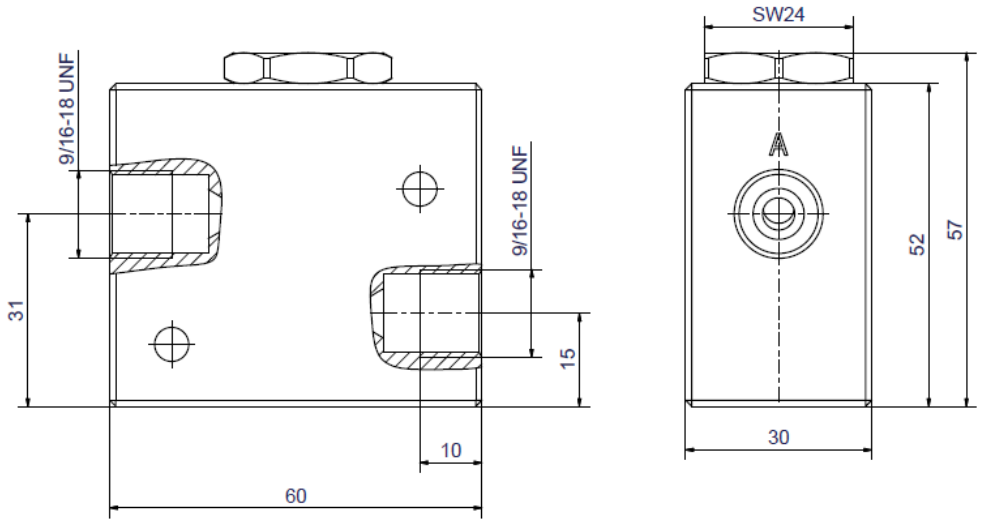

GSR Ventiltechnik
GmbH & Co. KG
Im Meisenfeld 1
D-32602 Vlotho
T +49 5228 779-0
info@ventiltechnik.de
www.ventiltechnik.de

The GSR logo is a registered trademark of GSR Ventiltechnik GmbH & Co. KG Note: All texts and images are the property of GSR Ventiltechnik GmbH & Co. KG and must not be replicated or modified,not even in part, without written approval Original products may differ from the product images shown, due to different materials and the like Subject to error and changes.